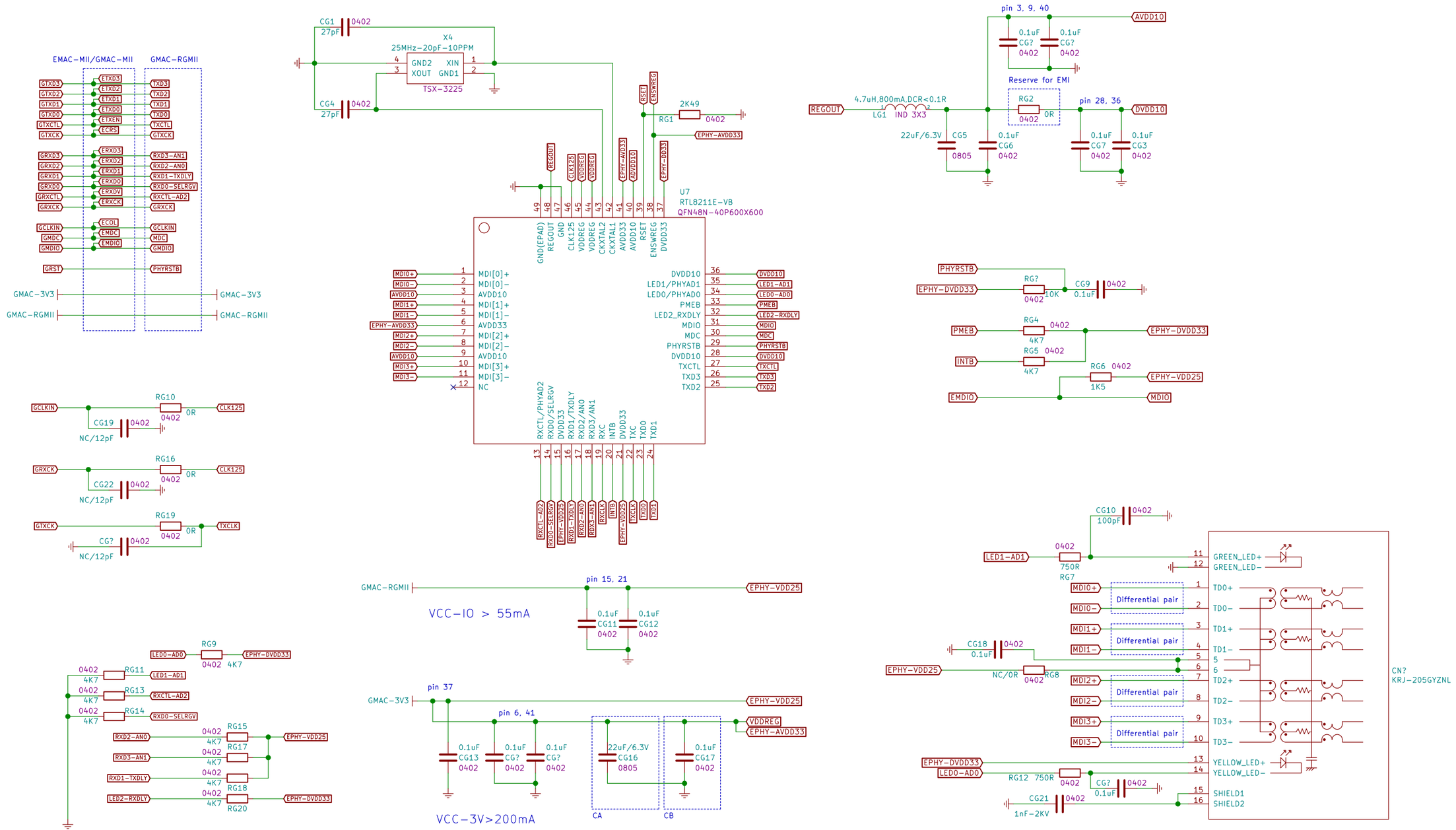


Sheet: /Sheet5ACD588F/
File: file5ACD588F.sch

**Title:**

| Size: A3 | Date: | Rev: |
|---|---|---|
| KiCad E.D.A. kicad 5.0.0-rc2-dev-unknown-9f5316e63ubuntu16.04.1 | | Id: 10/10 |